SPECIFICATION APPLIED

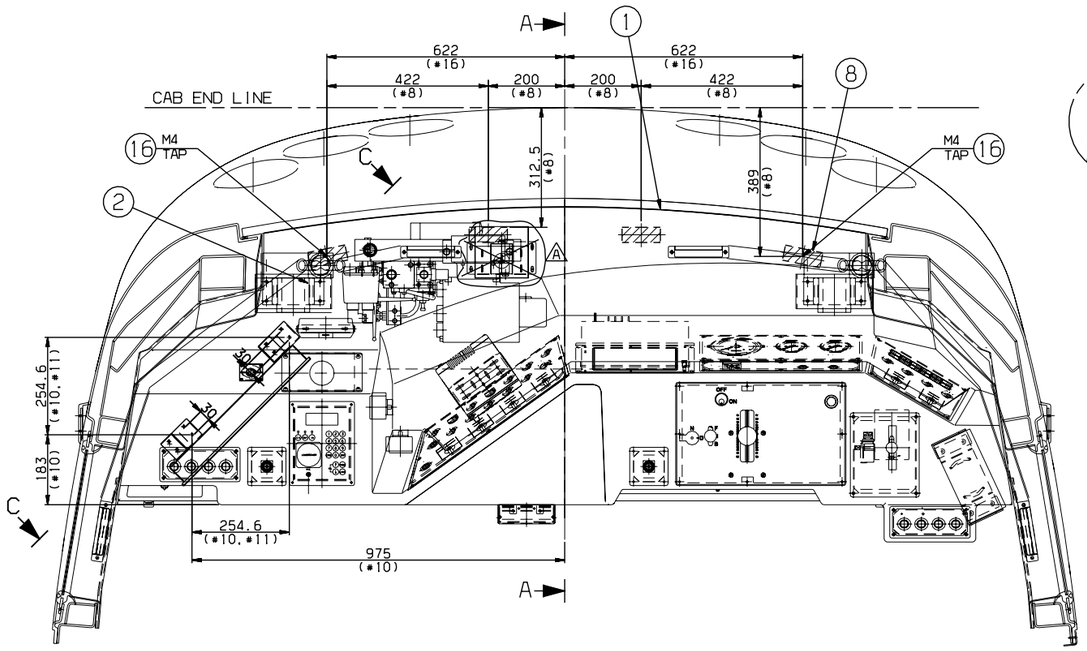

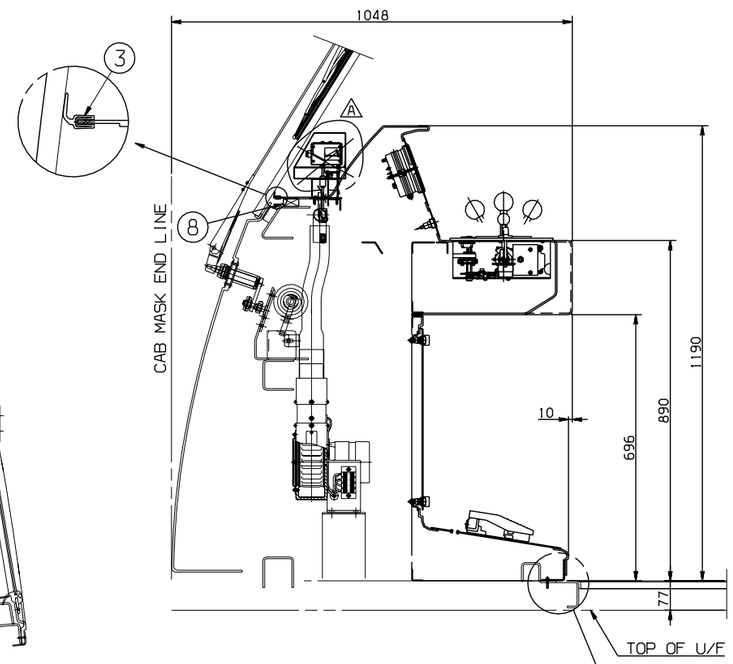

SECTION A-A

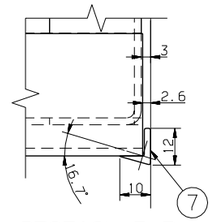

SECTION B-B
SCALE=1/1

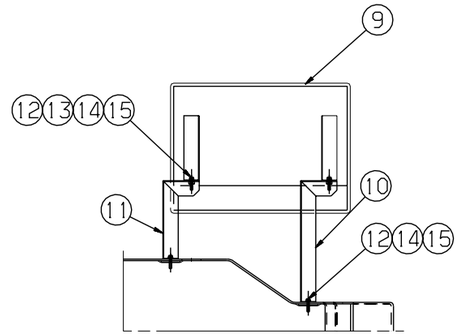

VIEW C-C

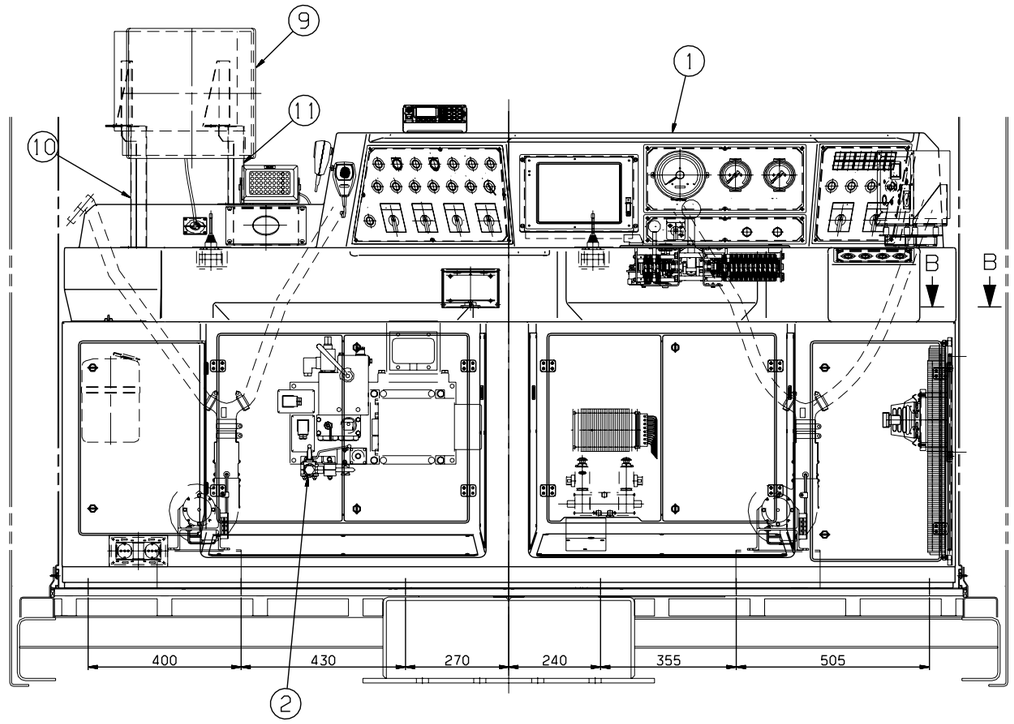

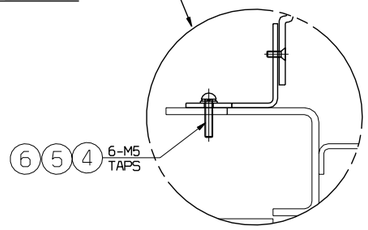

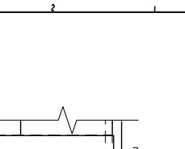

DETAIL #7
SCALE=2/1

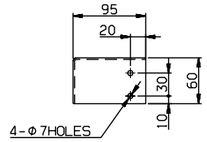

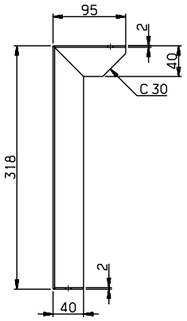

PART #10
SCALE=1/4

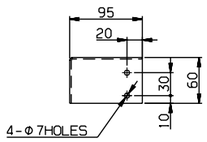

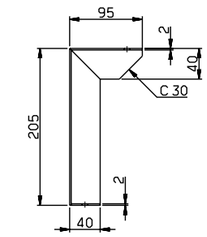

PART #11
SCALE=1/4

NOTE
1. PART #10,11 SHOULD BE PAINTED WITH BLACK COLOR.
(RAL9005,GLOSS : 60 ± 10%)

NO.	PART NO.	DESCRIPTION	MATERIAL	Q'TY	V.T	REMARKS
16	RS60607-103JD	SCREW,F.H	SCM435	2		M4X35,DACROTIZED
15	RS60801-006S	WASHER,SPRING	SUS304	8		M6
14	RS60809-001S	WASHER PLAIN	SUS304	8		M6
13	RS60401-007S	NUT, HEX	SUS304	4		M6
12	RS60101-060S	BOLT, HEX	SUS304	8		M6 X 30
11	RFC40001EJ0-011	BRACKET	SUS304	1		BLACK
10	RFC40001EJ0-010	BRACKET	SUS304	1		BLACK
9	RES40001AN0	CCTV LCD MONITOR	ASSY	1		
A 8	RFC40001EJ0-008A	PACKING	EPDM	4		T20X40,L=100 MS39000-017(R65-F3(EPDM))
A 7	RFC40001EJ0-007A	DECORATING RUBBER	EPDM	1		AR,L=4000 MS39000-017(R65-F3(EPDM))
6	RS60807-008S	WASHER,PLAIN	SUS304	6		M5
5	RS60801-005S	WASHER,SPRING	SUS304	6		M5
4	RS60610-091S	SCREW,R.H	SUS304	6		M5X25
3	RFC23011AN0	EDGE PROTECTOR	ASSY	1		L=2000
2	RFC40002AN0	INSTALL,DESK INSIDE	ASSY	1		
1	RFC40003EJ0	DESK,DRIVERS ASSY	ASSY	1		

기호 MARK	일 자 DATE	변 경 내 역 DETAIL OF REVISION(E.C ZONE)	설변번호 E.C NO.	설계 DGN	검도 CHK	승인 APP
Ax4	2015.01.25	DELETED IP CAMERA	RSD1402-U085	H.U.LEE	J.W.BAE	H.G.RYU

승인 APP	JeongYul Lee 2014.09.15
검도 CHK	KeongBong Park 2014.09.15
설계 DGN	JinWoo Jeong 2014.09.15
제도 DRG	JinHee Jeong 2014.09.10
재질 MAT'L	
중량 G.W	
일반공차 MC / WD / CT	B / /
SIZE	A1
표면처리 REF. NO.	FCP03663

품명 TITLE: INSTALLATION, DRIVER'S DESK

도면번호 DRG. NO: RFC40001EJ0 — Ver. 00 / Rev. -A

SCALE 1/8 — 매수 SHEET 1 of 1

HYUNDAI Rotem 현대로템주식회사

주조 CASTING	B	A	B
~ 40	2	4	
~ 30	2	3	
~ 10	1	1.5	
기계 가공 MACHINING	< 1	0.5	1
~ 3150	-	7	
~ 1600	4	5	
~ 800	3	4	
~ 400	2	3	
~ 200	1.5	2	
~ 100	1	1.5	

용접 WELDING	A	B	C
~ 20M	-	6.0	8.0
~ 15M	-	5.0	7.0
~ 12M	-	4.0	6.0
~ 8M	-	3.0	5.0
~ 4M	0.8	2.0	4.0
~ 2M	0.5	1.2	3.0
~ 1M	0.3	0.8	2.0
~ 315	0.2	0.5	1.2
~ 120	0.15	0.3	0.8
~ 30	0.1	0.2	0.5
3~5	0.05	0.1	0.2

주조 CASTING	B	A	B
~ 20M	8	14	24
~ 15M	7	12	21
~ 12M	6	10	18
~ 8M	5	8	14
~ 4M	4	6	11
~ 2M	3	4	8
~ 1M	2	3	6
~ 315	1	2	4
~ 120	1	2	3
~ 30	1	1	1

용접 WELDING	A	B	C
~ 20M	-	6.0	8.0
~ 15M	-	5.0	7.0
~ 12M	-	4.0	6.0
~ 8M	-	3.0	5.0
~ 4M	0.8	2.0	4.0
~ 2M	0.5	1.2	3.0
~ 1M	0.3	0.8	2.0
~ 315	0.2	0.5	1.2
~ 120	0.15	0.3	0.8
~ 30	0.1	0.2	0.5
3~5	0.05	0.1	0.2

기계 가공 MACHINING	A	B	C
가공시상존 없은교체용 GENERAL TOLERANCE			

본 도면은 당사 재산권에 의하여 무단복사/배포 금지됨. PROPERTY OF ISSUING ENTITY, CANNOT BE DISTRIBUTED OR REPRODUCED WITHOUT AUTHORIZATION.

CATIA